545

Capacities/Dimensions

Snow Tank		
Actual Volume	2.83 m³	(100 cu. ft.)
Compacted	3.54 m³	(125 cu. ft.)
Excess Water	416 L	(110 USG, 92 IMP)
Water		
Ice Making	727 L	(192 USG, 160 IMP)
Wash Water	310 L	(82 USG, 68 IMP)
Total	1000 L	(264 USG, 220 IMP)
Hydraulic Oil	95 L	(25 USG, 21 IMP)
Conveyor System		
Horizontal Auger	25.4 cm	(10 in.) dia.
Vertical Auger	25.4 cm	(10 in.) dia.
Overall Length		
Snow Tank Down	4.04 m	(159 in.)
Snow Tank Up	5.03 m	(198 in.)
Overall Height		
Snow Tank Down	2.16 m	(85 in.)
Snow Tank Up	3.91 m	(154 in.)
Overall Width	2.13 m	(84 in.)
Wheelbase	1.95 m	(77 in.)
Wheel Track	1.37 m	(54 in.)
Turning Radius		
At Conditioner	4.86 m	(16 ft.)
Shaving Blade	1.27 x 12.7 x 195.6 cm ½" x 5" x 77"	
Vehicle Weight		
Empty	2939 kg	(6480 lb.)
w/Water	3937 kg	(8680 lb.)

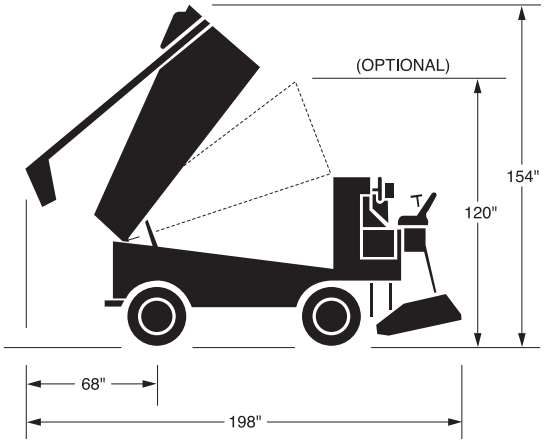

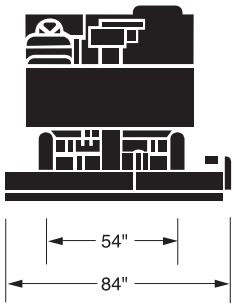

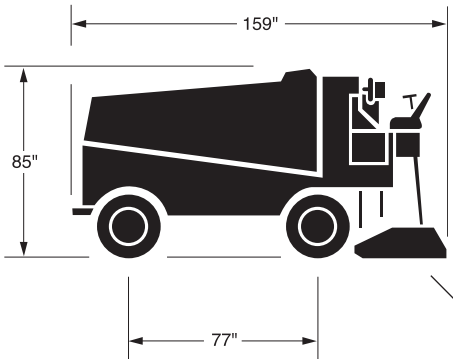

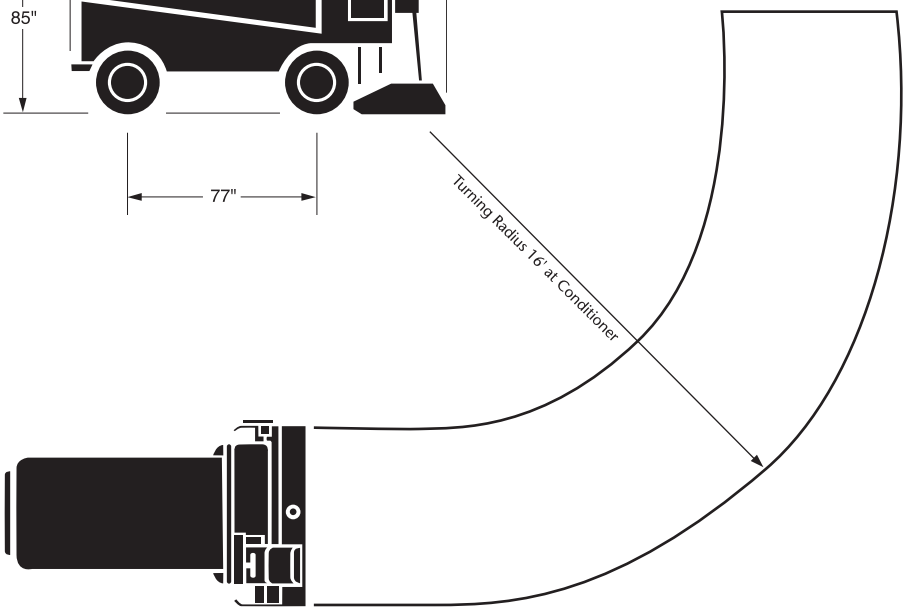

Engine Specifications/Features

2007 CARB/EPA certified Hyundai 2.0 litre
Four cylinder dual overhead cam, liquid cooled, 78 HP
Powerful and efficient.
Load sensing fuel governor enables true
"hands-free" operation by driver.

This brochure has been prepared only as a general guide to the customer. Every effort has been made to insure that all information is correct at the time of printing. Zamboni reserves the right to change prices, colors, materials, specifications and models. Some features described, or shown, may be optional at extra cost. Some options are required in combination with other options. Zamboni and the configuration of the Zamboni® ice resurfacing machine are registered trademarks of Frank J. Zamboni & Co., Inc.

This brochure is a PDF internet version posted on our website for reference only. The Zamboni Company assumes no responsibility for its content or use. For product and sales information, please contact the Zamboni Company at **www.zamboni.com**

ZAMBONI®

Zamboni USA
Frank J. Zamboni & Co., Inc.
15714 Colorado Ave., Paramount, CA USA 90723-0770
Phone (562) 633-0751 Fax (562) 633-9365

Zamboni Canada
Zamboni Company Ltd.
38 Morton Ave. East, Box 1388, Brantford, ON Canada N3T 5T6
Phone (519) 758-5000 Fax (519) 758-0500

Zamboni Europe
Eigentalstrasse 1, Box 123, CH-8309 Nuerensdorf, Switzerland
Phone +41 44 837 01 91 Fax +41 44 837 01 80

www.zamboni.com